2STA1695

High power PNP epitaxial planar bipolar transistor

Features

- High breakdown voltage V_{CEO} = -140 V
- Complementary to 2STC4468
- Typical f_t = 20 MHz
- Fully characterized at 125 °C

Applications

- Audio power amplifier

Description

This device is an PNP transistor manufactured using BiT-LA (Bipolar transistor for linear amplifier) technology. The resulting transistor exhibits good gain linearity behavior. Recommended for 70 W to 100 W high fidelity audio frequency amplifier output stages.

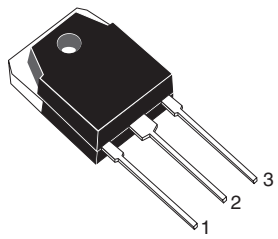

TO-3P

Figure 1. Internal schematic diagram

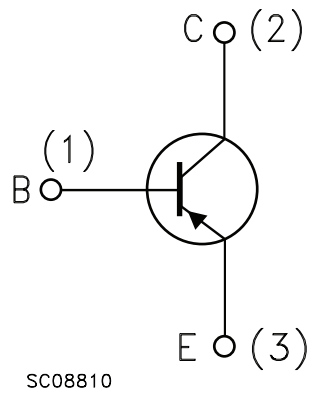

Table 1. Device summary

Order code	Marking	Package	Packaging
2STA1695	2STA1695	TO-3P	Tube

1 Electrical ratings

Table 2. Absolute maximum ratings

Symbol	Parameter	Value	Unit
V_{CBO}	Collector-base voltage (I_E = 0)	-140	V
V_{CEO}	Collector-emitter voltage (I_B = 0)	-140	V
V_{EBO}	Emitter-base voltage (I_C = 0)	-6	V
I_C	Collector current	-10	A
I_{CM}	Collector peak current (t_P < 5 ms)	-20	A
P_{tot}	Total dissipation at T_c = 25 °C	100	W
T_{stg}	Storage temperature	-65 to 150	°C
T_J	Max. operating junction temperature	150	°C

Table 3. Thermal data

Symbol	Parameter	Value	Unit
$R_{thj\text{-}case}$	Thermal resistance junction-case max	1.25	°C/W
$R_{thj\text{-}amb}$	Thermal resistance junction-ambient max	35.7	°C/W

2 Electrical characteristics

(T_{case} = 25 °C; unless otherwise specified)

Table 4. Electrical characteristics

Symbol	Parameter	Test conditions	Min.	Typ.	Max.	Unit
I_{CBO}	Collector cut-off current (I_E = 0)	V_{CB} = -140 V			-0.1	µA
I_{EBO}	Emitter cut-off current (I_C = 0)	V_{EB} = -6 V			-0.1	µA
$V_{(BR)CEO}$	Collector-emitter breakdown voltage (I_B = 0)	I_C = -50 mA	-140			V
$V_{(BR)CBO}$	Collector-base breakdown voltage (I_E = 0)	I_C = -100 µA	-140			V
$V_{(BR)EBO}$ (1)	Emitter-base breakdown voltage (I_C = 0)	I_E = -1 mA	-6			V
$V_{CE(sat)}$ (1)	Collector-emitter saturation voltage	I_C = -5 A I_B = -500 mA I_C = -7 A I_B = -700 mA			-0.5 -0.7	V V
V_{BE} (1)	Base-emitter voltage	V_{CE} = -5 V I_C = -5 A			-1.3	V
h_{FE}	DC current gain	I_C = -3 A V_{CE} = -4 V I_C = -5 A V_{CE} = -4 V	70 50		140	
f_T	Transition frequency	I_C = -0.5 A V_{CE} = -12 V		20		MHz
C_{CBO}	Collector-base capacitance (I_E = 0)	V_{CB} = -10 V f = 1 MHz		225		pF
	Resistive load					
t_{on}	Turn-on time	I_C = -5 A V_{CC} = -60 V		0.24		µs
t_{stg}	Storage time	I_{B1} = -I_{B2} = -0.5 A		1.2		µs
t_f	Fall time			0.24		µs

1. Pulsed: Pulse duration = 300 µs, duty cycle ≤ 1.5 %

2.1 Electrical characteristics (curves)

Figure 2. Safe operating area

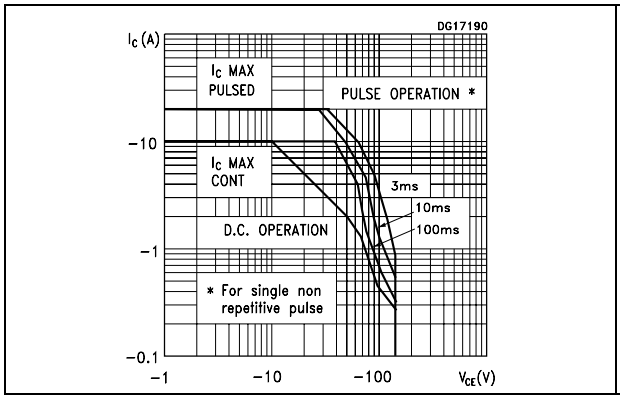

Figure 3. Power derating versus temperature

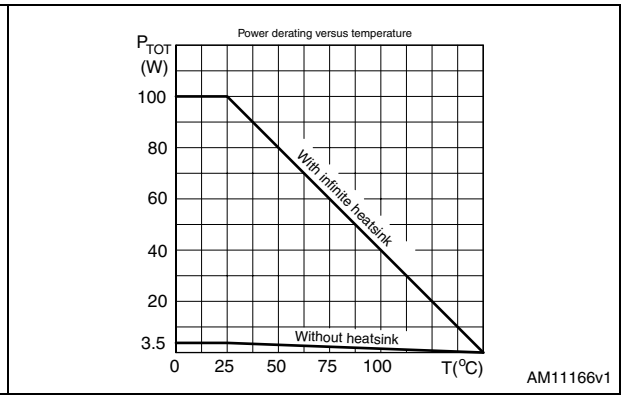

Figure 4. Output characteristics

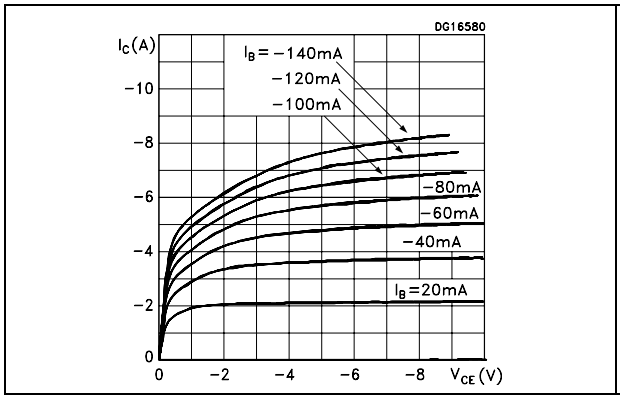

Figure 5. DC current gain

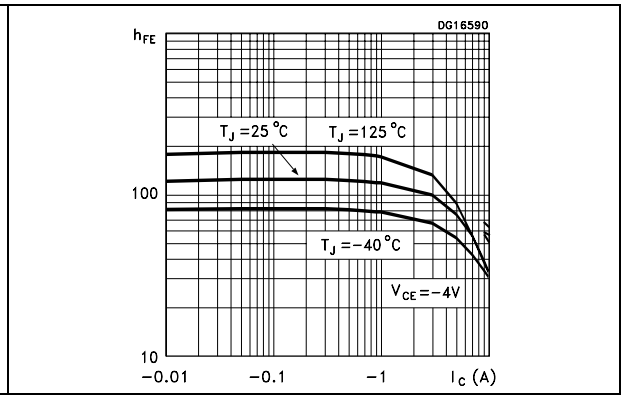

Figure 6. Collector-emitter saturation voltage

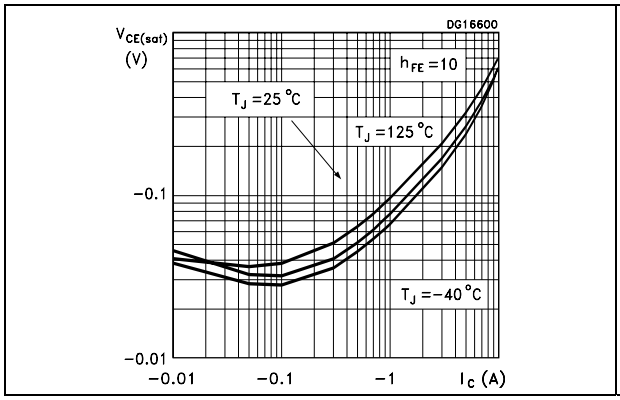

Figure 7. Base-emitter voltage

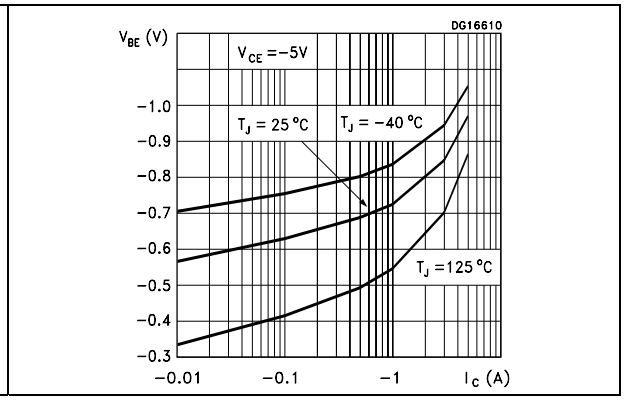

Figure 8. Base-emitter voltage

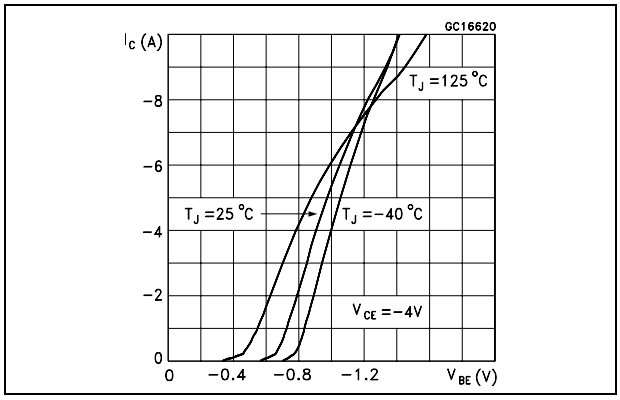

2.2 Test circuit

Figure 9. Resistive load switching test circuit

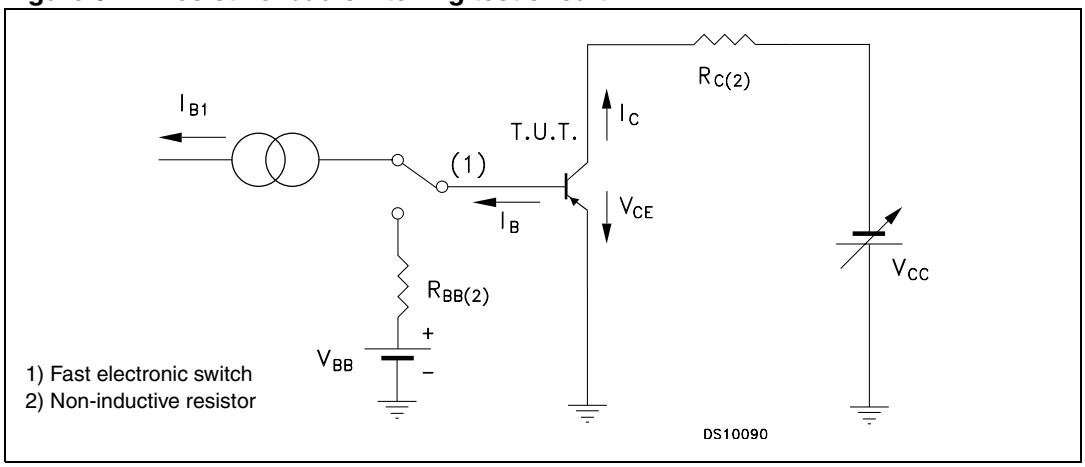

3 Package mechanical data

In order to meet environmental requirements, ST offers these devices in different grades of ECOPACK® packages, depending on their level of environmental compliance. ECOPACK® specifications, grade definitions and product status are available at: *www.st.com*. ECOPACK® is an ST trademark.

Table 5. TO-3P mechanical data

Dim.	mm		
	Min.	Typ.	Max
A	4.60		5
A1	1.45	1.50	1.65
A2	1.20	1.40	1.60
b	0.80	1	1.20
b1	1.80		2.20
b2	2.80		3.20
c	0.55	0.60	0.75
D	19.70	19.90	20.10
D1		13.90	
E	15.40		15.80
E1		13.60	
E2		9.60	
e	5.15	5.45	5.75
L	19.50	20	20.50
L1		3.50	
L2	18.20	18.40	18.60
øP	3.10		3.30
Q		5	
Q1		3.80	

Figure 10. TO-3P package dimensions

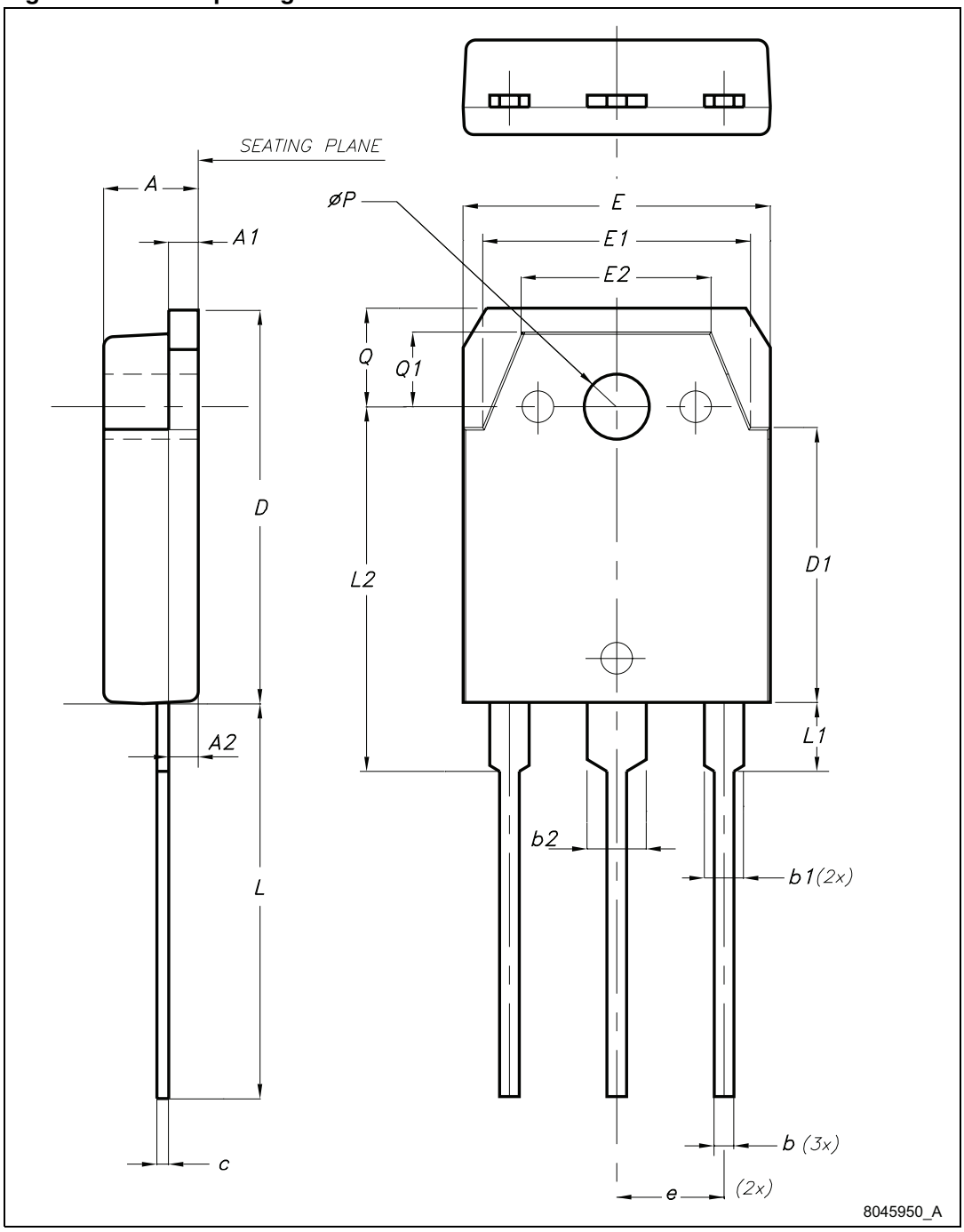

4 Revision history

Table 6. Document revision history

Date	Revision	Changes
18-May-2007	1	Initial release
06-Nov-2008	2	Document status promoted from preliminary data to datasheet.
07-Feb-2012	3	– *Figure 3* inserted – Mechanical data updated

Please Read Carefully:

Information in this document is provided solely in connection with ST products. STMicroelectronics NV and its subsidiaries (“ST”) reserve the right to make changes, corrections, modifications or improvements, to this document, and the products and services described herein at any time, without notice.

All ST products are sold pursuant to ST’s terms and conditions of sale.

Purchasers are solely responsible for the choice, selection and use of the ST products and services described herein, and ST assumes no liability whatsoever relating to the choice, selection or use of the ST products and services described herein.

No license, express or implied, by estoppel or otherwise, to any intellectual property rights is granted under this document. If any part of this document refers to any third party products or services it shall not be deemed a license grant by ST for the use of such third party products or services, or any intellectual property contained therein or considered as a warranty covering the use in any manner whatsoever of such third party products or services or any intellectual property contained therein.

UNLESS OTHERWISE SET FORTH IN ST’S TERMS AND CONDITIONS OF SALE ST DISCLAIMS ANY EXPRESS OR IMPLIED WARRANTY WITH RESPECT TO THE USE AND/OR SALE OF ST PRODUCTS INCLUDING WITHOUT LIMITATION IMPLIED WARRANTIES OF MERCHANTABILITY, FITNESS FOR A PARTICULAR PURPOSE (AND THEIR EQUIVALENTS UNDER THE LAWS OF ANY JURISDICTION), OR INFRINGEMENT OF ANY PATENT, COPYRIGHT OR OTHER INTELLECTUAL PROPERTY RIGHT.

UNLESS EXPRESSLY APPROVED IN WRITING BY TWO AUTHORIZED ST REPRESENTATIVES, ST PRODUCTS ARE NOT RECOMMENDED, AUTHORIZED OR WARRANTED FOR USE IN MILITARY, AIR CRAFT, SPACE, LIFE SAVING, OR LIFE SUSTAINING APPLICATIONS, NOR IN PRODUCTS OR SYSTEMS WHERE FAILURE OR MALFUNCTION MAY RESULT IN PERSONAL INJURY, DEATH, OR SEVERE PROPERTY OR ENVIRONMENTAL DAMAGE. ST PRODUCTS WHICH ARE NOT SPECIFIED AS "AUTOMOTIVE GRADE" MAY ONLY BE USED IN AUTOMOTIVE APPLICATIONS AT USER’S OWN RISK.

Resale of ST products with provisions different from the statements and/or technical features set forth in this document shall immediately void any warranty granted by ST for the ST product or service described herein and shall not create or extend in any manner whatsoever, any liability of ST.

ST and the ST logo are trademarks or registered trademarks of ST in various countries.

Information in this document supersedes and replaces all information previously supplied.

The ST logo is a registered trademark of STMicroelectronics. All other names are the property of their respective owners.

© 2012 STMicroelectronics - All rights reserved

STMicroelectronics group of companies

Australia - Belgium - Brazil - Canada - China - Czech Republic - Finland - France - Germany - Hong Kong - India - Israel - Italy - Japan - Malaysia - Malta - Morocco - Philippines - Singapore - Spain - Sweden - Switzerland - United Kingdom - United States of America

www.st.com